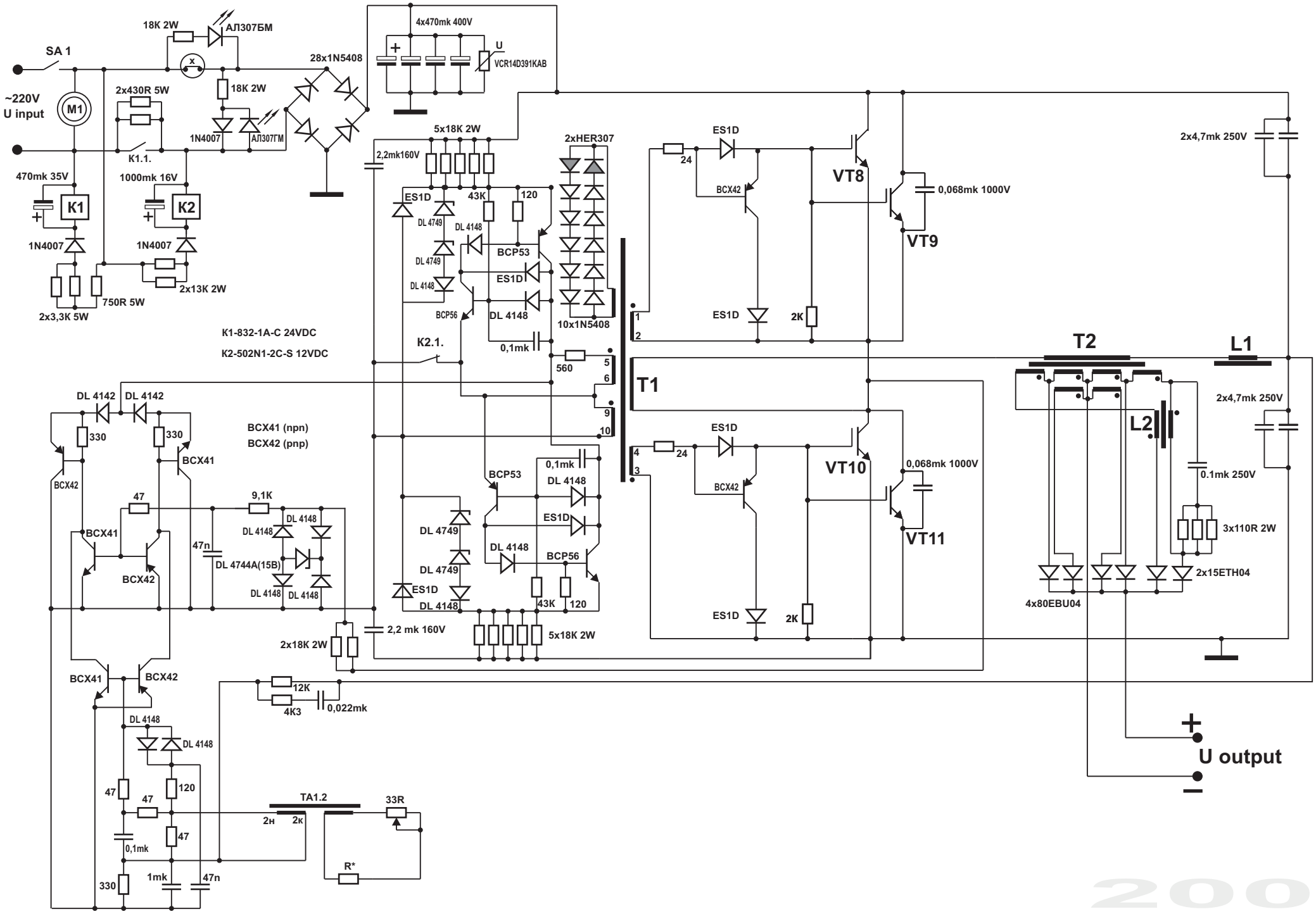
SA 1
~220V
U input
M1
18K 2W
АЛ307БМ
2x430R 5W
18K 2W
1N4007
АЛ307ГМ
K1.1.
28x1N5408
4x470mk 400V
U
VCR14D391KAB
470mk 35V
1000mk 16V
K1
K2
1N4007
1N4007
2x13K 2W
750R 5W
2x3,3K 5W
K1-832-1A-C 24VDC
K2-502N1-2C-S 12VDC
5x18K 2W
2,2mk160V
ES1D
43K
120
DL 4749
DL 4148
BCP53
ES1D
DL 4749
DL 4148
BCP56
DL 4148
0,1mk
K2.1.
560
2xHER307
10x1N5408
T1
ES1D
24
BCX42
VT8
0,068mk 1000V
VT9
ES1D
2K
2x4,7mk 250V
T2
L1
L2
2x4,7mk 250V
0.1mk 250V
3x110R 2W
2x15ETH04
4x80EBU04
ES1D
24
BCX42
VT10
0,068mk 1000V
VT11
ES1D
2K
DL 4142
DL 4142
330
330
BCX41 (npn)
BCX42 (pnp)
BCX41
BCX42
47
9,1K
BCX41
BCX42
47n
DL 4148
DL 4744A(15B)
DL 4148
DL 4148
0,1mk
DL 4148
BCP53
ES1D
DL 4749
DL 4148
BCP56
DL 4749
ES1D
DL 4148
43K
120
2,2 mk 160V
2x18K 2W
5x18K 2W
BCX41
BCX42
12K
4K3
0,022mk
DL 4148
DL 4148
47
120
47
47
0,1mk
330
1mk
47n
TA1.2
2н
2к
33R
R*
U output
+
-